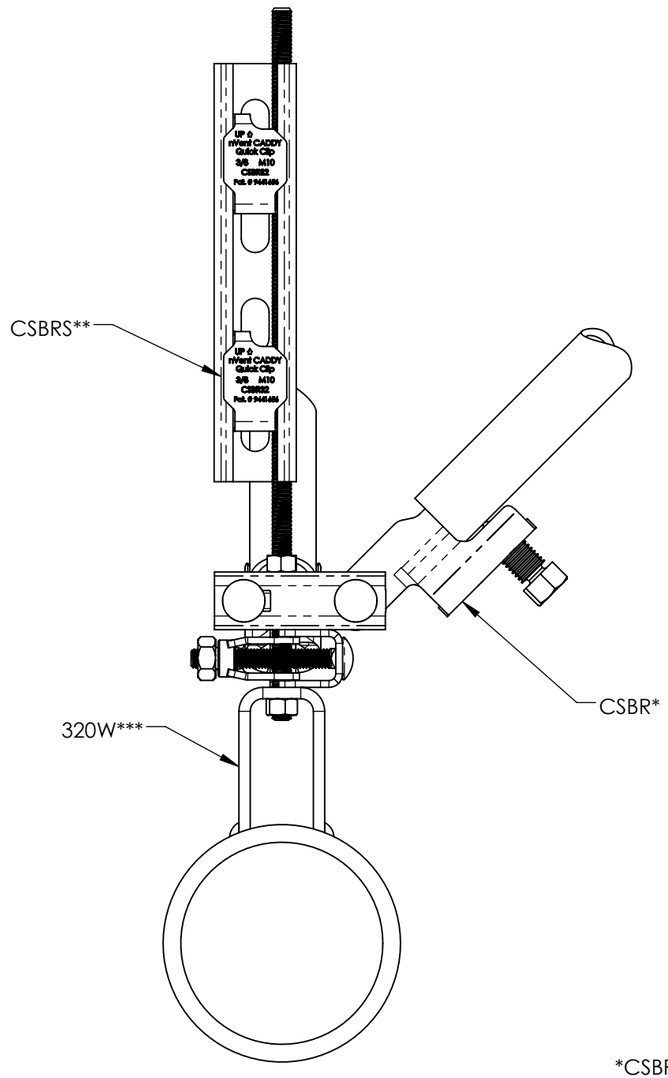

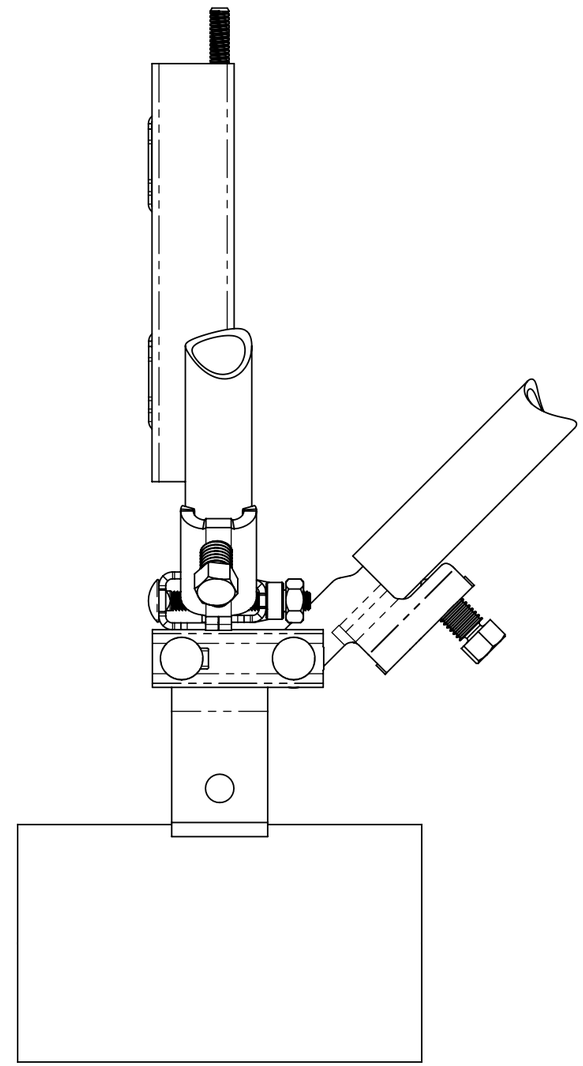

*CSBR1, CSBR2
**CSBRS2 - CSBRS6
***320W0037 - 320W0100