Overview

The LENTON INTERLOK Rebar Splicing System is designed to connect #5 (16 mm) through #18 (57 mm) reinforcing steel bars (rebar), conforming to ASTM® A615/A615M, A706/A706M, BS4449, CSA G30.18 or AS1302 standards. The connection incorporates the LENTON taper threaded system in conjunction with a special high-early strength cementitious grout.

The LENTON grout is a special ready-to-use grout, designed to maintain fluidity for an extended period of time while achieving high-early and 28-day strengths. See LENTON INTERLOK Rebar Splicing System Instruction Manual at www.erico.pentair.com for more information.

The coupler is produced as a casting and LENTON taper threads are machined under strict Quality Control guidelines. Taper threading of the rebar ends are produced using Pentair threading equipment. Pre-threaded bars can be provided from Pentair's network of regional manufacturing centers, or by positioning a threader at the precaster's plant.

Field Template Instructions

1. The General Contractor should work closely with the precast manufacturer to secure a template for holding the reinforcing steel dowels. The plywood or metal template is prepared by drilling holes to securely fit the diameter of the reinforcing steel bar (rebar). See Figure 1.

2. Within a grouping of rebar dowels, each bar should be located approximately within 1/8" of the specified location. Any group of dowels are to be located approximately within 1/4" of the specified location.

3. Rebar dowels that are protruding from the foundation should be fabricated so that the dowel is approximately 4" to 6" longer than the required couplers embedment length as defined in the LENTON INTERLOK Instruction Manual. See Figure 2.

4. Templates should be securely fastened once they are placed. Dowels that are part of the same grouping should be positioned with a single template.

5. Dowel bars can be secured with a clamping mechanism. See Figure 3.

6. Confirm dowels are placed as specified per construction drawings.

7. After the concrete foundation is poured, the templates and dowels should be checked to make sure they have not shifted.

8. Once the concrete is cured, the clamps and template are removed, after which the excess length of dowels can be cut to the proper size. See figure 4. To determine the cut-off length of the dowels, please refer to the LENTON INTERLOK Instruction Manual. Measure from the top of the shim to accurately determine the amount to remove. Make sure to include joint thickness prior to cutting.

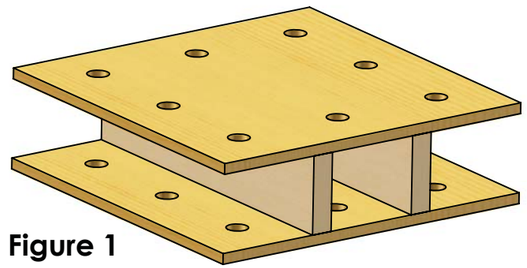

Figure 1

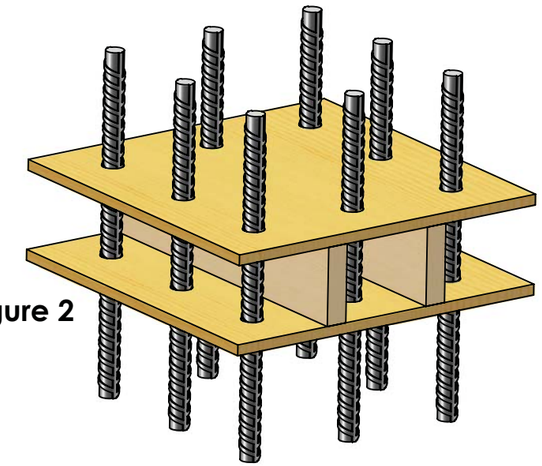

Figure 2

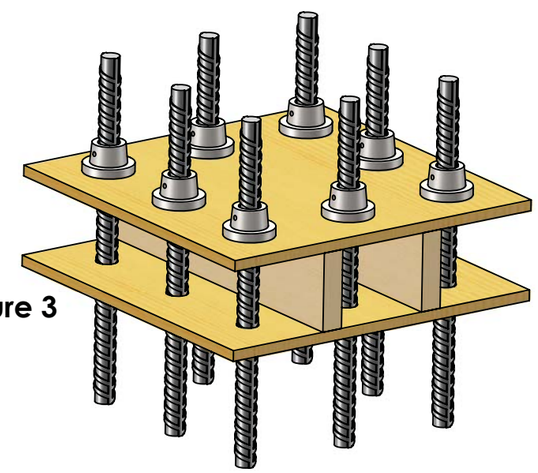

Figure 3

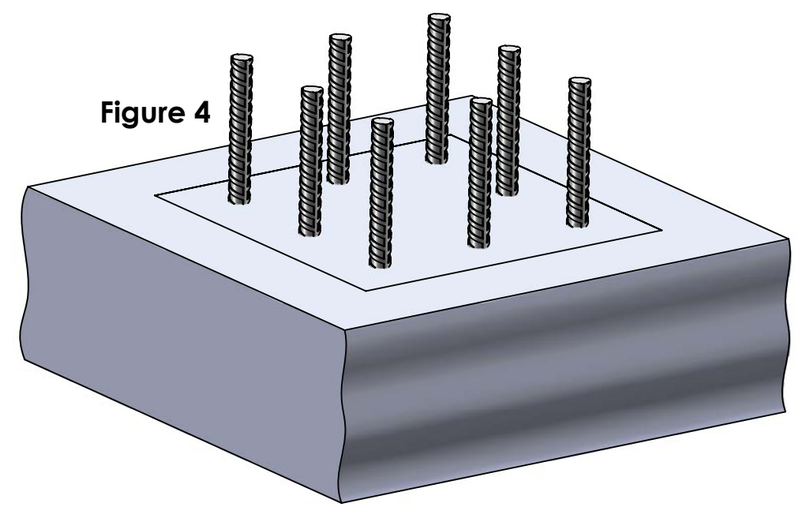

Figure 4

This document and the contents thereof is the property of Pentair and is furnished to you for information only. All dimensions and tolerances are in inches [mm], unless otherwise specified.
Revisions are to be computer processed. No manual changes permitted.
This document is not to be used as an instruction sheet.

WARNING:
1. Pentair products shall be installed and used only as indicated in PENTAIR product instruction sheets and training materials. Instruction sheets are available at www.erico.pentair.com and from your Pentair customer service representative.
2. Pentair products must never be used for a purpose other than the purpose for which they were designed or in a manner that exceeds specified load ratings.
3. All instructions must be completely followed to ensure proper and safe installation and performance.
4. Improper installation, misuse, misapplication or other failure to completely follow Pentair's instructions and warnings may cause product malfunction, property damage, serious bodily injury and/or death, and void your warranty.

The customer is responsible for:
a. Conformance to all governing codes.
b. The integrity of structures to which the products are attached, including their capability of safely accepting the loads imposed, as evaluated by a qualified engineer.
c. Using appropriate industry standard hardware as noted above.

SAFETY INSTRUCTIONS:
All governing codes and regulations and those required by the job site must be observed.
Always use appropriate safety equipment such as eye protection, hard hat, and gloves as appropriate to the application.

Pentair, CADDY, ERICO CADWELD, ERICO CRITEC, ERICO, ERIFLEX, and LENTON are owned by Pentair or its global affiliates. All other trademarks are the property of their respective owners.
Pentair reserves the right to change specifications without prior notice.

LENTON

TECHNICAL SUPPORT:
www.erico.pentair.com

CRSLK1 _ B

© 2017 Pentair All Rights Reserved

REV	DESCRIPTION	EN #	DATE	DRN	CHK	APP	QA	MFG
B	UPDATED GROUT REFERENCES	1014727	29/09/17	MJC	SPB	PBA	-	-

Tolerance (Inch) Unless Noted
Angular Tolerance: ±N/A°
Fractional Tolerance: ±N/A
Two Place Decimal: ±N/A
Three Place Decimal: ±N/A

Tolerance [mm] Unless Noted
Angular Tolerance: ±N/A°
One Place Decimal: ±N/A
Two Place Decimal: ±N/A

PENTAIR

Third Angle Projection

Title: LENTON INTERLOK, Precast Precast Splicing System

Scale None | DWG CRSLK1 | REV B

B Size | SHT 1 Of 1