GM-CLIP-M

PRODUCT DESCRIPTION

Smart Clip for fast and reliable installation of heating cables GM-2X, GM-2XT and Frostop Black in U-shaped gutters.

TECHNICAL DATA

Material	Stainless spring steel EN 1.4310
Wire	Ø 2,5 mm
Height	100 mm
Gutter type	U-shaped gutters with width 100-150 mm and depth 65-80 mm, with max edge/corner width of 17 mm
Suitable cables	GM-2X, GM-2XT and Frostop Black
Box content	10 clips/box
Registered Design No	001357560-0002
Compatibility	Ensure compatibility with the materials to avoid galvanic corrosion

ORDER INFORMATION

Item number	1244-013850
EAN	5414506014587
E-nr	89 391 42
El.nr	10 383 31
Snro	81 691 67
El-nr	9935006730

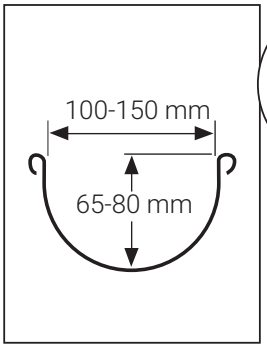

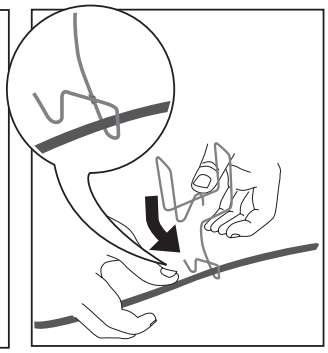

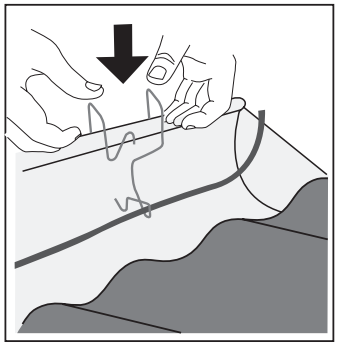

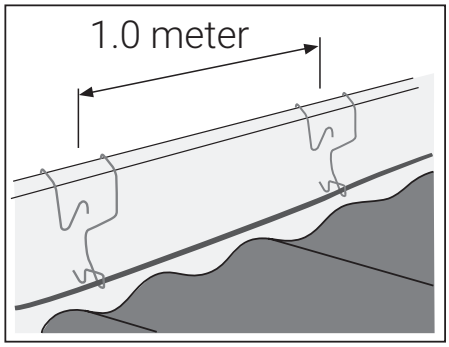

Sverige

Tel +46 31 335 58 00
salesse@nVent.com

nVent

nVent.com

Our powerful portfolio of brands:

CADDY ERICO HOFFMAN RAYCHEM SCHROFF TRACER

©2018 nVent. nVent is owned by nVent or its global affiliates. All other trademarks are the property of their respective owners.
nVent reserves the right to change specifications without prior notice.

Raychem-DS-EU0321-GMClipM-EN-1805