T-M-10-S/+X+Y

SURFACE SENSING THERMOSTAT

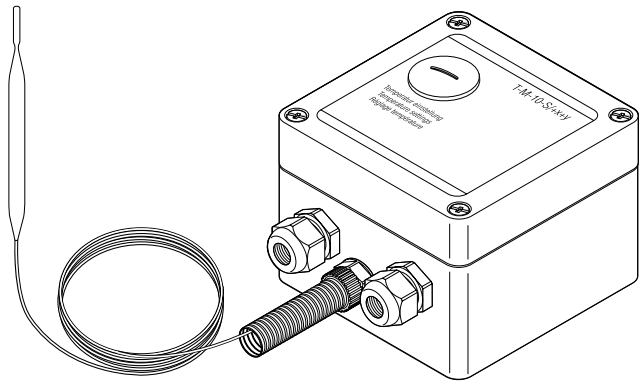

A surface sensing thermostat providing temperature control in safe areas.

Temperature set point adjustment can be completed, without opening the enclosure, via a removable plug in the lid.
The 2 meter long stainless steel capillary is protected at the enclosure by a flexible conduit.

Direct connection of the heating cable is possible.

The thermostat is available in 3 temperature ranges:
0–50°C; 0–200°C; 50–300°C.

GENERAL

	T-M-10-S/+0+50C	T-M-10-S/0+200C	T-M-10-S/+50+300C
Area of use	Ordinary area	Ordinary area	Ordinary area

PRODUCT SPECIFICATION

Max rated voltage (nom)	230 Vac	230 Vac	230 Vac
Temperature setting	0°C to +50°C	0°C to +200°C	+50°C to +300°C
Switching type	Single pole change over (SPDT) 100,000 cycles at 16 A	Single pole change over (SPDT) 100,000 cycles at 16 A	Single pole change over (SPDT) 100,000 cycles at 16 A
Switching capacity	Max 16 A	Max 16 A	Max 16 A
Hysteresis/Differential	2.5% of temperature range	2.5% of temperature range	2.5%of temperature range
Accuracy	±1.5% of setpoint for temperature setting in upper third of range (measured at 22°C)		
Setting	Internal dial, through lid	Internal dial, through lid	Internal dial, through lid
Terminal size	4 mm^2	4 mm^2	4 mm^2
Ambient operating temp. range	−20°C to +80°C	−20°C to +80°C	−20°C to +80°C

OUTPUT PARAMETERS

Control relay	Change-over switch	Change-over switch	Change-over switch

APPROVALS

(Russia, Kazakhstan, Belarus)
For other countries contact your local nVent representative.

DIMENSIONS (IN MM)

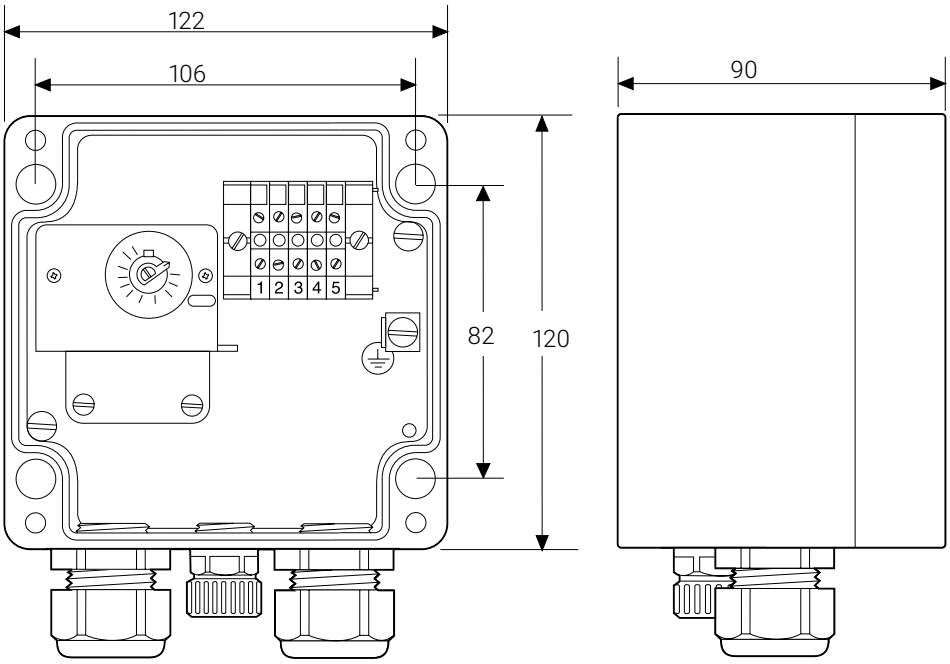

ENCLOSURE

	T-M-10-S/0+50C	T-M-10-S/0+200C	T-M-10-S/+50+300C
Protection	IP65	IP65	IP65
Dimension	122 x 120 x 90 mm	122 x 120 x 90 mm	122 x 120 x 90 mm
Materials body and lid	Grey, polyester enclosure		
Lid fixing	4 captive screws, stainless steel		
Entries	2 entries: 1 x M25 Reducer M25 (M)/M20 (F) incl. M20 gland (ø 8-13 mm) 1 x M20 gland (ø 8-13 mm)		

TEMPERATURE SENSOR

Type		Fluid filled capillary, 2 m long		
Dimensions	ø	8 mm	8 mm	8 mm
	Length sensing element	166 mm	78 mm	56 mm
Material		V4A Stainless Steel		
Exposure temperature		−40°C to +60°C	−20°C to +230°C	−20°C to +345°C
Minimum bending radius		10 mm for capillary, the sensor cannot be bent		

MOUNTING METHOD

Support bracket	SB-110 or SB-111 or surface mount	SB-110 or SB-111 or surface mount	SB-110 or SB-111 or surface mount

ORDERING DETAILS

Ordering references	PN Number	Weight
T-M-10-S/0+50C	105336-000	1 kg
T-M-10-S/0+200C	337388-000	1 kg
T-M-10-S/+50+300C	607672-000	1 kg

MEANING OF REFERENCE: T-M-10-S/+X+Y

T = thermostat

M = mechanical thermostat

10 = control thermostat

S = surface sensing

x = min temperature of control range

y = max temperature of control range

CONNECTION DETAILS

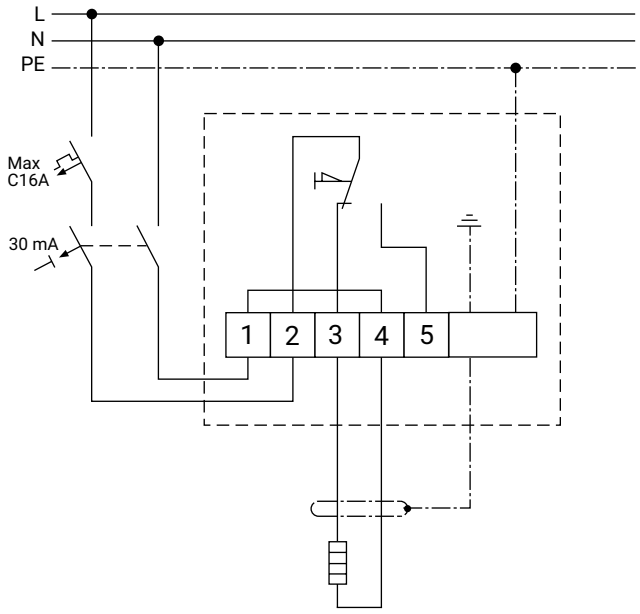

Heating system

North America
Tel +1.800.545.6258
Fax +1.800.527.5703
thermal.info@nvent.com

Europe, Middle East, Africa
Tel +32.16.213.511
Fax +32.16.213.604
thermal.info@nvent.com

Asia Pacific
Tel +86.21.2412.1688
Fax +86.21.5426.3167
cn.thermal.info@nvent.com

Latin America
Tel +1.713.868.4800
Fax +1.713.868.2333
thermal.info@nvent.com

nVent.com

Our powerful portfolio of brands:
CADDY ERICO HOFFMAN RAYCHEM SCHROFF TRACER

©2018 nVent. All nVent marks and logos are owned or licensed by nVent Services GmbH or its affiliates. All other trademarks are the property of their respective owners.
nVent reserves the right to change specifications without notice.

Raychem-DS-DOC2210-TM10SXY-EN-1902