JBU-100

CONNECT AND PROTECT

Junction box for modular system

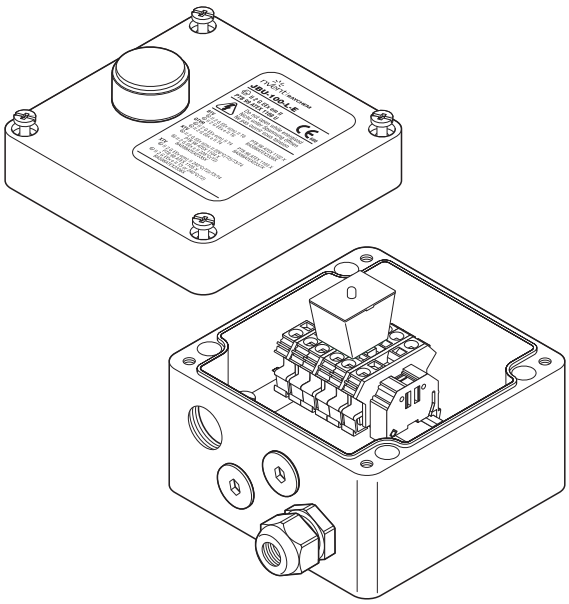

The nVent JBU-100 kit is designed to connect power to up to three nVent RAYCHEM BTV, QTVR, XTV, KTV, HTV or VPL industrial parallel heating cables and is approved by PTB for use in hazardous locations.

Innovative Spring-type terminals provide fast installation and safe, reliable, maintenance-free operation.

The box is part of the modular component system, it allows for maximum flexibility and can be either wall or pipe mounted.

Connection kits (M25) and insulation entry kits have to be ordered separately. The box is offered in two basic versions customised to local installation practices.

All kits are also available as a lighted version (-L). These include a unique light module with a superbright green LED that simply plugs into the terminals, and a lens in the lid. This provides indication that power is available in the box.

DESCRIPTION

JBU-100-E JBU-100-L-E	JBU-100-EP JBU-100-L-EP
This box is certified for use in IEC regions and provides four M25 threaded entries, stopping plugs and one plastic power cable gland.	This box is certified for use in IEC regions and provides four M25 threaded entries, an earthing plate and an external earth stud. It is designed for use with armoured power cables.

KIT CONTENTS

1 junction box with terminals 1 light module (for -L only) 1 M25 gland for a power cable with 8-15 mm diameter 2 M25 stopping plugs	1 junction box with terminals with earth plate and external earth stud 1 light module (for -L only) 2 M25 stopping plugs

APPROVALS (**)

Hazardous locations

JBU-100-E JBU-100-L-E	JBU-100-EP JBU-100-L-EP
PTB 20 ATEX 1008 U Ⓔx II 2 G Ex eb mb IIC Gb Ⓔx II 2 D Ex tb mb IIIC Db IECEx PTB 20.0014U Ex eb mb IIC Gb Ex tb mb IIIC Db	
EAC Ex TC RU C-BE.МЮ62.B.00054/18 ООО “ТехИмпорт” Ex e IIC Gb U Ex tb IIIC Db U Ex e mb IIC Gb U Ex tb mb IIIC Db U Ta −55°C…+56°C IP66 Ta −55°C…+40°C IP66 (-L versions only)	
CCC **JBU-100-E (EP)** Ex e IIC Gb Ex tD A21 IP66 **JBU-100-L-E (EP)** Ex e mb IIC Gb Ex tD A21 mbD 21 IP66	
BAS21UKEX0657U	
CSA c us CL I ZN 1 AEx eb IIC T* Gb Ex eb IIC T* Gb ZN21 AEx tb IIIC T* °C Db Ex tb IIIC T*°C Db CL I ZN 1 AEx eb mb IIC T* Gb Ex eb mb IIC T* Gb ZN21 AEx mb tb IIIC T*°C Db Ex mb tb IIIC T*°C Db (For -L only)	
DNV-GL Approval for use on ships and mobile offshore units. When used with BTV, QTVR Heating systems: DNV certificate number TAE00000TU When used with XTV, KTV Heating systems: DNV certificate number TAE00000TV	

*For system T-rating, see heating cable or design documentation
** Localized versions may exist with limited approvals and different part numbers. Contact your local sales representative.

DIMENSIONS (NOMINAL)

JBU-100-E JBU-100-L-E	JBU-100-EP JBU-100-L-EP
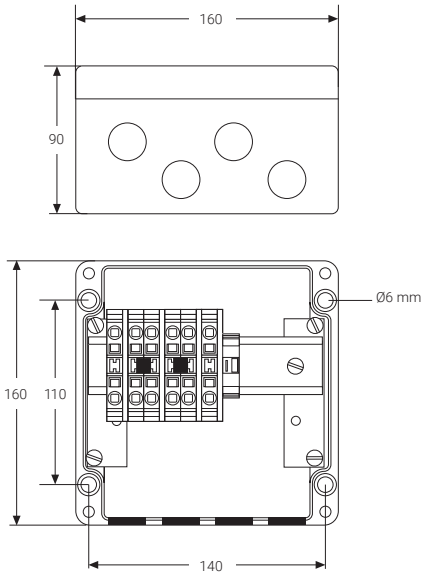	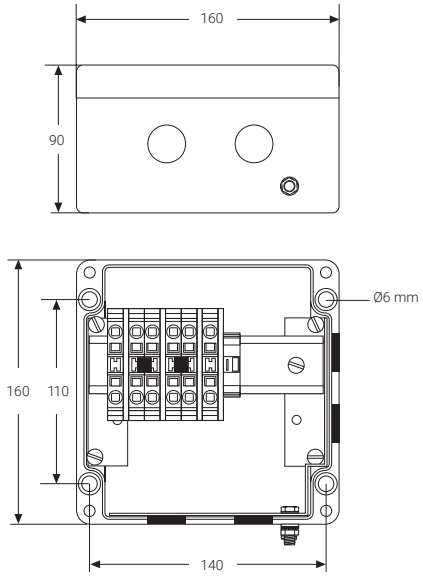

PRODUCT SPECIFICATIONS

	JBU-100-E JBU-100-L-E	JBU-100-EP JBU-100-L-EP
Ingress protection	IP66	IP66
Entries	4 x M25	4 x M25
Ambient temperature range	−55°C to +56°C[1] (JBU-100-E) −40°C to +40°C (JBU-100-L-E)	−55°C to +56°C[1] (JBU-100-EP) −40°C to +40°C (JBU-100-L-EP)
Terminals	Spring-type terminals	Spring-type terminals
	2 phase, 2 neutral, 2 protective earth	2 phase, 2 neutral, 2 protective earth
Max. conductor size	10 mm^2 stranded, 10 mm^2 solid	10 mm^2 stranded, 10 mm^2 solid
Max. operation voltage	480 Vac	480 Vac
Max. current rating[2]	53 A	53 A

[1] Extra conditions for safe use apply for ambient temperatures above +40°C. Temperature resistant power cable and metal glands must be used. Please refer to the certificate or installation instructions for full details.

[2] For pipe temperature > 150°C and < 260°C and XTV, KTV or HTV heating cables, the maximum operating current shall be reduced to maximum 20 A. Refer to heating cable specification for the maximum pipe temperature.

MATERIALS OF CONSTRUCTION

Enclosure, lid	Electrostatic charge-resistant glass-filled engineered polymer, black	Electrostatic charge-resistant glass-filled engineered polymer, black
Lid screws	Stainless steel	Stainless steel
Lid gasket	Silicone rubber	Silicone rubber
Earth continuity plate	N/A	Steel, zinc plated, and blue chromated

OPTIONAL LED INDICATOR LIGHT

Colour	Green	Green
Voltage rating	100-254 Vac	100-254 Vac
Power consumption	< 1 W	< 1 W

Ordering details (**)

JUNCTION BOX

Part Description (**)	JBU-100-E	JBU-100-EP
PN (Weight)	051976-000 (1.7 kg)	243948-000 (1.8 kg)

JUNCTION BOX WITH LIGHT

Part Description	JBU-100-L-E	JBU-100-L-EP
PN (Weight)	069262-000 (2.1 kg)	113974-000 (2.2 kg)

ACCESSORIES

Heating cable connection kits	C25-100, C25-21, CCON25-100	C25-100, C25-21, CCON25-100, C25-100-METAL, C25-100-METAL-NP (Nickel plated brass), C25-100-METAL-SS (stainless steel)
Insulation entry kit	IEK-25-04 or IEK-25-PIPE	IEK-25-04 or IEK-25-PIPE
Power cable gland	GL-55-M25 hazardous area approved gland for cables 8-15 mm (temperature range −55°C/70°C) GL-36-M25 hazardous area approved gland for cables 8-17.5 mm (temperature range −20°C/70°C)	GL-38-M25-METAL (optional)
Junction box support bracket (optional)	SB-100, SB-101	SB-100, SB-101

(**) Localized versions may exist with limited approvals and different part numbers. Contact your local sales representative.

North America
Tel +1.800.545.6258
Fax +1.800.527.5703
thermal.info@nVent.com

Europe, Middle East, Africa
Tel +32.16.213.502
Fax +32.16.213.604
thermal.info@nVent.com

Asia Pacific
Tel +86.21.2412.1688
Fax +86.21.5426.3167
cn.thermal.info@nVent.com

Latin America
Tel +1.713.868.4800
Fax +1.713.868.2333
thermal.info@nVent.com

Our powerful portfolio of brands:
CADDY ERICO HOFFMAN RAYCHEM SCHROFF TRACER

©2022 nVent. All nVent marks and logos are owned or licensed by nVent Services GmbH or its affiliates. All other trademarks are the property of their respective owners.
nVent reserves the right to change specifications without notice.

RAYCHEM-DS-EU1397-JBU100-EN-2201